Disclosure and photocopying of this document, exploitation and communication of its contents are not permitted, unless permission is expressly granted. All rights are reserved.

REAR VIEW

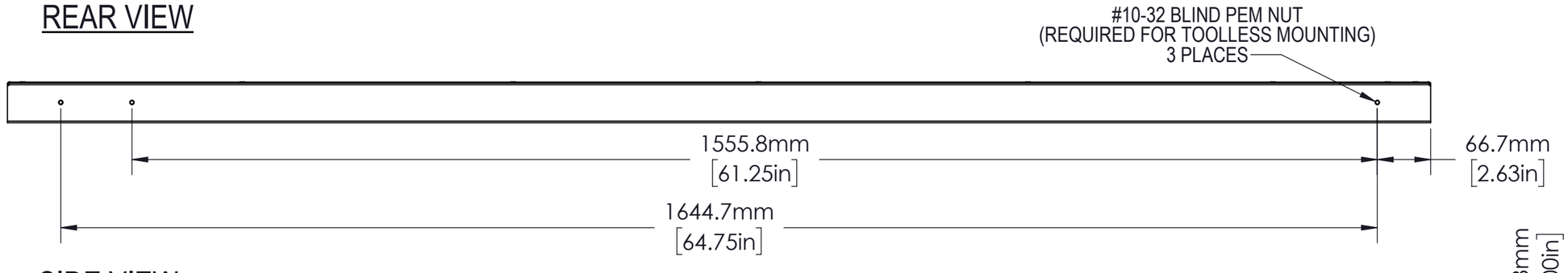

SIDE VIEW

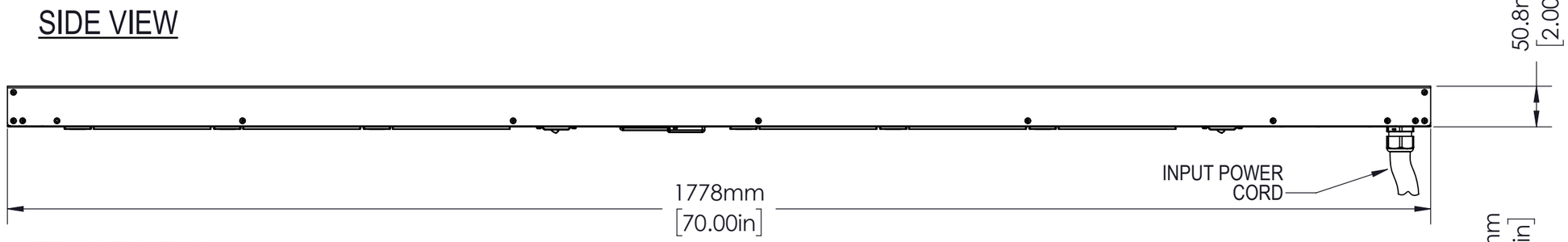

FRONT VIEW

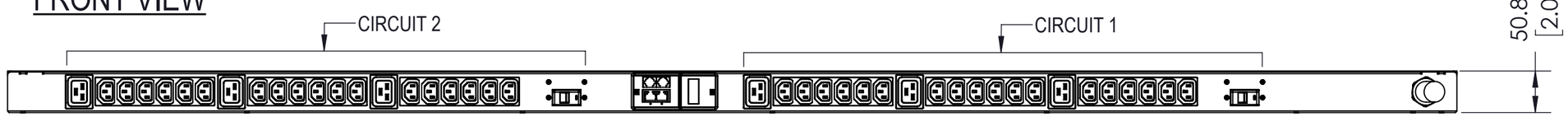

2P+E (IP44)

OUTPUT POWER

CIRCUIT	PHASE	RECEPTACLE TYPE (QUANTITY)	VOLTAGE (V)	MAX. CONTINUOUS AMPS (A)	
				PER RECEPTACLE	PER CIRCUIT
1	L1	18xC13, 3xC19	200-240	10/16	16
2	L1	18xC13, 3xC19	200-240	10/16	16

INPUT POWER

INPUT CORD	INPUT PLUG	WIRE COUNT	FREQUENCY (Hz)	VOLTAGE (V)	RATED AMPS (A)	MAX. CONT. AMPS (A)
3m	IEC 60309 IP44	1/N/PE	50/60	200-240	32	32

METERING PARAMETER	MEASUREMENT ACCURACY
VOLTAGE	±1%
CURRENT	±1% - Input Current ±2% - Circuit/Breaker Current

AGENCY COMPLIANCE:
CE Marked
RoHS Compliant
Complies with EN 55032 and EN 55024
Complies with IEC 60950-1 (CB Certificate Available)

ENVIRONMENTAL RATING:
Maximum Operating Temperature: 60C / 140F

NOTES
UNIT DIMENSIONS: 70in x 2.0in x 2.0in /1778mm x 51mm x 51mm
SHIPPED WEIGHT: 16lbs (7.26kg)
SHIPPING DIMENSIONS: 86in x 9in x 7in / 2172mm x 223mm x 159mm
Toolless Mounting Hardware 61.25in / 1556mm and 64.75in / 1645mm, and 7938 Vertical Mounting Bracket Kit

Dimensions in mm

Rev.	Change	Date	Name
-	-	-	-

Allgemeintoleranzen
General tolerances
-

Oberfläche
Finish
-

	Date	Name
Drawn	06/09/18	SW
Checked	-	-
Approved	-	-

VERTIV™

Werkstoff / Material
-

Gewicht:
Weight: -

Bezeichnung / Description
Monitored, Vertical, 32A, 230V, (36)C13/(6)C19

Zeichnungs-Nr. / Drawing no.
VP8853

Maßstab
Scale
1:6

Verwendet in / Used in
-

Blatt/Sheet
1/1

Weitergabe sowie Vervielfältigung dieser Unterlage, Verwertung und Mitteilung ihres Inhalts nicht gestattet, soweit nicht ausdrücklich zugestanden. Alle Rechte vorbehalten.